KITAZAWA

Brass, Cast Iron & Ductile Iron Valves

PN16, PN25, Class 125, ANSI150
Ball, Gate, Globe, Check, Butterfly Valves and Y-Strainer

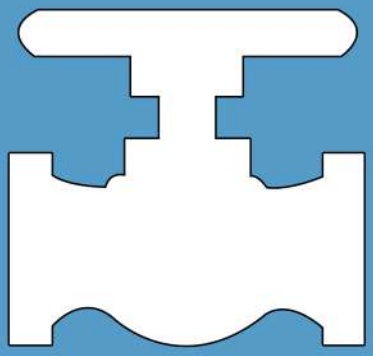

KITZ VALVE & ACTUATION VIETNAM CO.,LTD.
https://kitz-kvv.com

CONTENT

Valve Type	Figure	Material	Rating	Connection	Specification	Size	Page
Ball	CB25B CB25N	Brass	PN25	Threaded	Full Port / BSPT or NPT	1/4" ~ 2"	2
Gate	CG125B CG125N	Brass	Class125	Threaded	NS / BSPT or NPT	3/8" ~ 2"	3
Gate	FG16F	Ductile Iron	PN16	Flanged	RS / Brass Seat	2" ~ 12"	4
Gate	FG16FS	Ductile Iron	PN16	Flanged	RS / Soft Seat	2" ~ 24"	5
Gate	FG16FN	Ductile Iron	PN16	Flanged	NRS / Brass Seat	2" ~ 12"	6
Gate	FG16FNS	Ductile Iron	PN16	Flanged	NRS / Soft Seat	2" ~ 16"	7
Globe	CL16B CL16N	Brass	PN16	Threaded	BSPT or NPT	1/2" ~ 2"	8
Globe	FL16F	Cast Iron	PN16	Flanged	-	2" ~ 12"	9
Check	CC16B CC16N	Brass	PN16	Threaded	Swing / BSPT or NPT	1/2" ~ 2"	10
Check	FC16F	Cast Iron	PN16	Flanged	Swing	2" ~ 12"	11
Check	FD16WU	Cast Iron Ductile Iron	PN16	Wafer	Dual Plate	2" ~ 20" 24"	12
Butterfly	FF16WU-L	Ductile Iron	PN16	Wafer	Lever	1 1/2" ~ 6"	13
Butterfly	FF16WU-G	Ductile Iron	PN16	Wafer	Gear	1 1/2" ~ 24"	14
Butterfly	FF150LU-L	Ductile Iron	ANSI150	Lug	Lever	11/2" ~ 6"	15
Butterfly	FF150LU-G	Ductile Iron	ANSI150	Lug	Gear	1 1/2" ~ 24"	16
Strainer	CY16B CY16N	Brass	PN16	Threaded	Y-Type / BSPT or NPT	1/2" ~ 2"	17
Strainer	FY16F	Ductile Iron	PN16	Flanged	Y-Type	1/2" ~ 24"	18
Strainer	FY25F	Ductile Iron	PN25	Flanged	Y-Type	2" ~ 16"	19

FIGURE CODING

Material	
Brass	C
Cast/Ductile Iron	F

Type		
Ball		B
Gate		G
Globe		L
Check	Swing	C
Check	Dual Plate	D
Strainer	Y-Type	Y
Butterfly		F

Rating	
PN16	16
PN25	25
Class125	125
ANSI150	150

Connection	
BSPT	B
NPT	N
Flanged	F
Wafer	W
Lug	L

Specification		
Standard		
FC-Gate	NRS	N
FC-Gate	Soft Seat	S
Butterfly	Trim: 304SS	U

Operation	
Lever	-L
Gear	-G

KITAZAWA

PN25 FORGED BRASS BALL VALVE

Fig: CB25B
CB25N

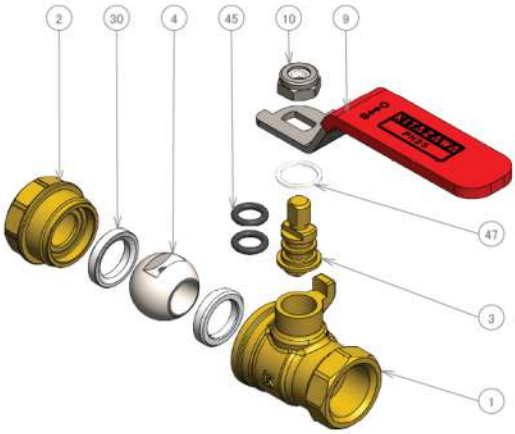

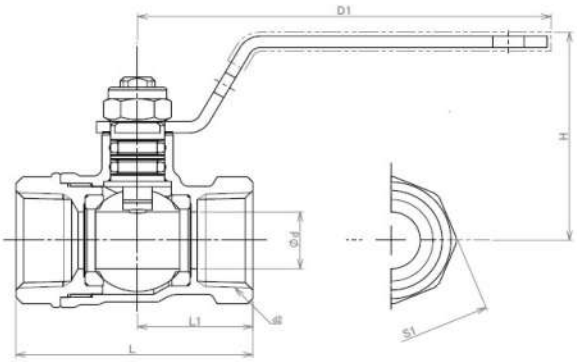

SPECIFICATION

- Forged Brass Body
- BSPT or NPT Threaded End
- Full Port Design
- Bolted Body and Cap
- Blow-out Proof Stem
- Double O-ring Stem Seals
- Nominal Pressure: 2.5 MPa
- Working Temperature:-10 ~ 120 °C

MATERIAL LIST

No.	PART	MATERIAL	
1	BODY	FORGED BRASS	
2	BODY CAP	FORGED BRASS	
3	STEM	BRASS ROD	※1
4	BALL	FORGED BRASS	※2
9	HANDLE	CARBON STEEL	※3
10	HANDLE NUT	CARBON STEEL	
30	BALL SEAT	PTFE	
45	O-RING	FKM	
47	THRUST WASHER	PBT	

Note
※1 Ni Plating
※2 Ni • Cr Plating
※3 Zinc dichromate plated and plastic covering

⚠

- DO NOT USE FOR STEAM
- DO NO USE UNDER FREEZE
- DO NO USE FOR UNDERGROUND APPLICATION
- DO NOT USE FOR FLAMMABLE
- DO NOT USE FOR POISIONOUS GAS APPLICATION
- WARRANTY ONLY APPLIES IN ASEAN

SIZE	DIMENSIONS (mm)						d2
DN	L	L1	D1	Ø d	H	S1	BSPT or NPT
8	40.2	19.3	70	10	37	17.5	1/4
10	40.5	19.7	70	10	37	21	3/8
15	49.6	24.8	80	15	40	25	1/2
20	57.8	28.9	80	20	43	31	3/4
25	68.2	34.1	110	25	50	38	1
32	82	41	110	32	55	47	1.1/4
40	90.4	45.2	150	40	65	54	1.1/2
50	109.6	54.8	150	50	72	66	2

KITAZAWA

CLASS 125 FORGED BRASS NON-RISING GATE VALVE

Fig: CG125B
CG125N

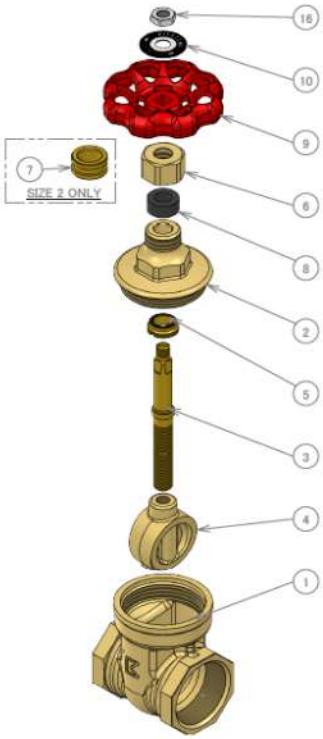

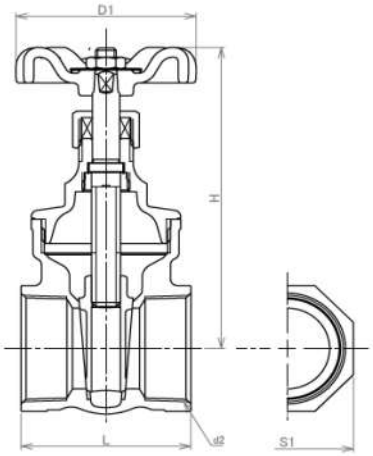

SPECIFICATION

- Forged Brass Body
- BSPT or NPT Threaded End
- Screwed Bonnet
- Nominal Pressure: 1.18 MPa
- Working Temperature: -10 ~ 120 °C

Note
※1 Dezincification Resistant Brass
※2 Aramid Fibers Graphite
※3 Aluminum Die-cast

MATERIAL LIST

No.	PART	MATERIAL
1	BODY	FORGED BRASS
2	BONNET	FORGED BRASS
3	STEM	BRASS ROD ※1
4	DISC	FORGED BRASS
5	LOCK NUT	FORGED BRASS
6	PACKING NUT	BRASS ROD
7	PACKING NUT	BRASS ROD
8	GLAND PACKING	GRAPHITE ※2
9	HANDWHEEL	ALUMINUM ALLOY ※3
10	WHEEL NUT	CARBON STEEL
16	NAME PLATE	ALUMINUM

⚠

- DO NOT USE FOR STEAM
- DO NO USE UNDER FREEZE
- DO NO USE FOR UNDERGROUND APPLICATION
- DO NOT USE FOR FLAMMABLE
- DO NOT USE FOR POISIONOUS GAS APPLICATION
- WARRANTY ONLY APPLIES IN ASEAN

SIZE	DIMENSIONS (mm)				d2
DN	L	D1	H	S1	BSPT or NPT
10	38	55	73	23	3/8
15	42	55	73	26	1/2
20	47	55	83	32	3/4
25	50	70	94	39	1
32	60	70	112	48	1.1/4
40	63	80	120	55	1.1/2
50	72	90	151	68	2

* All or part of the information listed on this sheet may be changed or removed without prior notice.

PN16 Ductile Iron Rising Stem Gate Valve

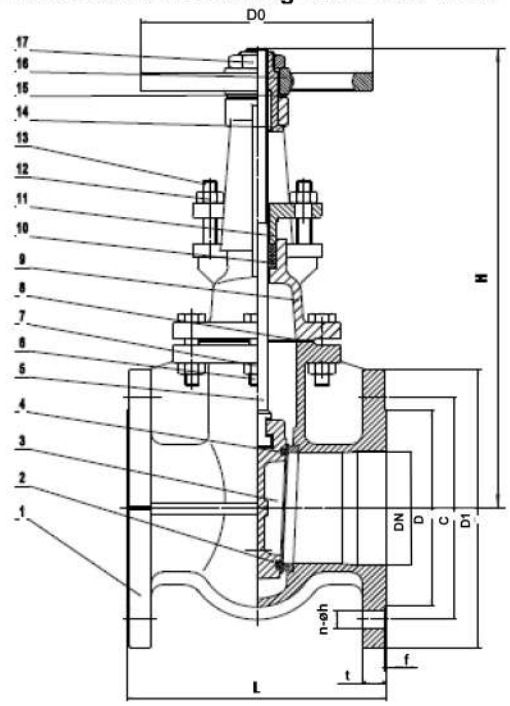

Fig: FG16F

SPECIFICATION

- Ductile Iron Body
- Design According to DIN EN1171
- Face to Face Dimension Conforms to Series 14 of BS EN 558-1
- Flange Conforms to BS EN1092
- Nominal Pressure 1.6MPa
- Working Temperature: -10~120°C
- Suitable Medium: Water and Oil

MATERIALS

NO	NAME OF PARTS	QTY	MATERIALS
1	BODY	1	DUCTILE IRON
2	BODY SEAT RING	2	CAST BRONZE
3	DISC	1	DUCTILE IRON
4	DISC SEAT RING	2	CAST BRONZE
5	STEM	1	STAINLESS STEEL
6	BONNET BOLT	1S	STEEL
7	BONNET NUT	1S	STEEL
8	GASKET	1	GRAPHITE
9	BONNET	1	DUCTILE IRON
10	GLAND PACKING	1S	GRAPHITE
11	GLAND	1	DUCTILE IRON
12	GLAND NUT	1S	STEEL
13	GLAND BOLT	1S	STEEL
14	STEM NUT	1	CAST BRASS
15	GASKET	1	CAST BRASS
16	HANDLE WHEEL	1	CAST IRON
17	WHEEL NUT	1	DUCTILE IRON

⚠

- DO NOT USE FOR STEAM
- DO NO USE UNDER FREEZE
- DO NOT USE FOR FLAMMABLE
- DO NOT USE FOR POISIONOUS GAS APPLICATION
- WARRANTY ONLY APPLIES IN ASEAN

SIZE	DIMENSIONS(mm)								
DN	L	D1	C	D	t	f	n-øh	D0	H
50	150	165	125	99	16	2	4-19	160	254
65	170	185	145	118	16	2	4-19	160	294
80	180	200	160	132	17	2	8-19	160	331
100	190	220	180	156	17	2	8-19	200	385
125	200	250	210	184	18	3	8-19	200	457
150	210	285	240	211	20	3	8-23	250	545
200	230	340	295	266	21	3	12-23	250	683
250	250	405	355	319	23	3	12-28	320	823
300	270	460	410	370	24	4	12-28	320	952

* All or part of the information listed on this sheet may be changed or removed without prior notice.

KITAZAWA

PN16 Ductile Iron Rising Stem Soft Seated Gate Valve

Fig: FG16FS

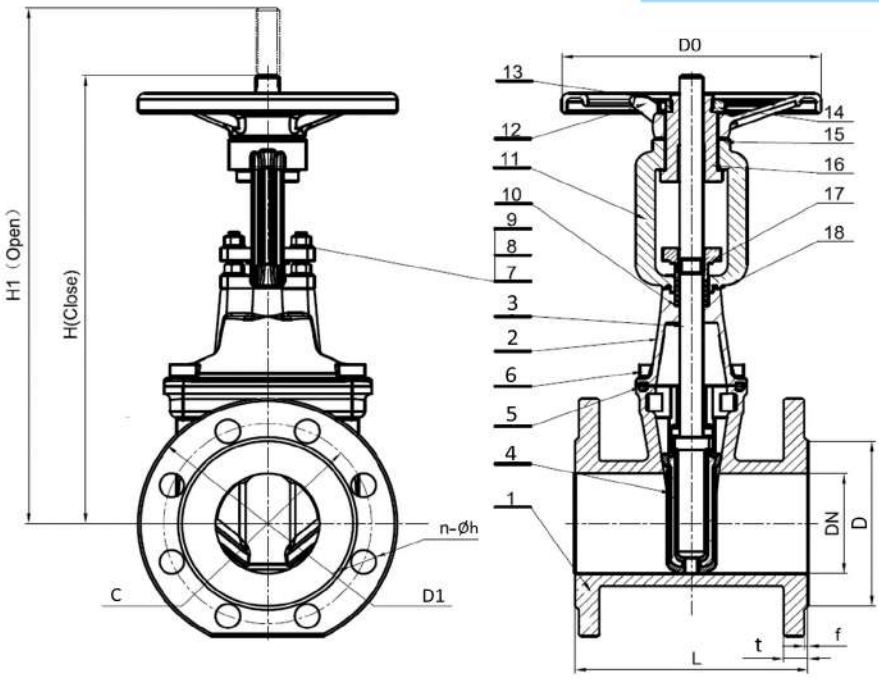

SPECIFICATION

- Ductile Iron Body
- Design According to EN1171
- Face to Face Dimension Conforms to Series 14 of EN 558
- Flange Conforms to EN1092-2
- Nominal Pressure: 1.6MPa
- Working Temperature: 0~100°C
- Suitable Medium: Water

MATERIALS

NO	NAME OF PARTS	QTY	MATERIALS
1	BODY	1	DUCTILE IRON
2	BONNET	1	DUCTILE IRON
3	STEM	1	STAINLESS STEEL
4	DISC	1	DUCTILE IRON+EPDM
5	GASKET	1	EPDM
6	BONNET BOLT	1 S	CARBON STEEL+ZINC
7	GLAND BOLT	2	STAINLESS STEEL
8	GLAND NUT	2	STAINLESS STEEL
9	WASHER	1S	STAINLESS STEEL
10	GLAND PACKING	1S	PTFE
11	YOKE	1	DUCTILE IRON
12	HANDLE WHEEL	1	DUCTILE IRON
13	SCREW	1	STAINLESS STEEL
14	HANDWHEEL NUT	1	CARBON STEEL
15	PAD	1	STAINLESS STEEL
16	STEM NUT	1	ALUMINUM BRONZE
17	PACKING GLAND	1	DUCTILE IRON
18	O RING	1	EPDM

⚠

- DO NOT USE FOR STEAM
- DO NO USE UNDER FREEZE
- DO NOT USE FOR FLAMMABLE
- DO NOT USE FOR POISIONOUS GAS APPLICATION
- WARRANTY ONLY APPLIES IN ASEAN

SIZE	DIMENSIONS(mm)									
DN	L	D1	C	D	t	f	n-øh	D0	H	H1
50	150	165	125	99	19	3	4-19	160	290	345
65	170	185	145	118	19	3	4-19	200	325	395
80	180	200	160	132	19	3	8-19	200	365	450
100	190	220	180	156	19	3	8-19	200	405	505
125	200	250	210	184	19	3	8-19	240	500	630
150	210	285	240	211	19	3	8-23	240	555	700
200	230	340	295	266	20	3	12-23	280	715	920
250	250	405	355	319	22	3	12-28	320	860	1120
300	270	460	410	370	24.5	4	12-28	320	980	1290
350	290	520	470	429	26.5	4	16-28	500	1210	1570
400	310	580	525	480	28	4	16-31	500	1320	1730
450	330	640	585	548	30	4	20-31	500	1470	1920
500	350	715	650	609	31.5	4	20-34	600	1590	2098
600	390	840	770	720	36	5	20-37	600	1870	2480

* All or part of the information listed on this sheet may be changed or removed without prior notice.

PN16 Ductile Iron Non Rising Stem Gate Valve

Fig: FG16FN

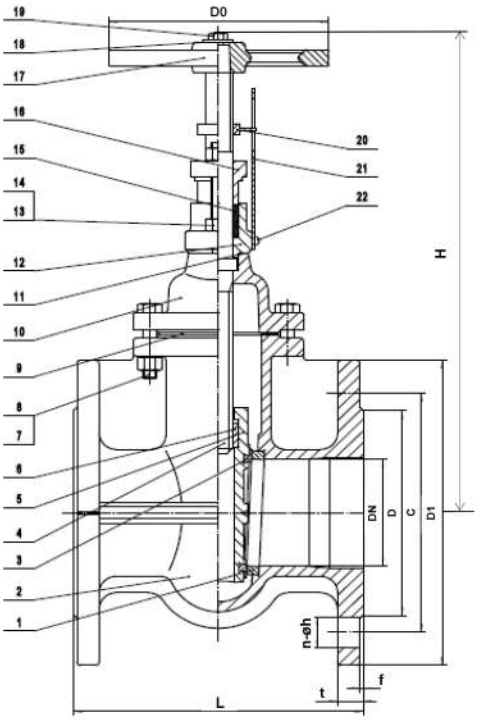

SPECIFICATION

- Ductile Iron Body
- Design According to DIN EN1171
- Face to Face Dimension Conforms to Series 14 of BS EN 558-1
- Flange Conforms to BS EN1092
- Nominal Pressure 1.6MPa
- Working Temperature: -10~120°C
- Suitable Medium: Water and Oil

MATERIALS

NO	NAME OF PARTS	QTY	MATERIALS
1	BODY SEAT RING	2	CAST BRONZE
2	BODY	1	DUCTILE IRON
3	DISC SEAT RING	2	CAST BRONZE
4	STEM	1	STAINLESS STEEL
5	DISC	1	DUCTILE IRON
6	STEM NUT	1	CAST BRASS
7	BONNET BOLT	1S	STEEL
8	BONNET NUT	1S	STEEL
9	GASKET	1	GRAPHITE
10	BONNET	1	DUCTILE IRON
11	GASKET	1	RUBBER GRAPHITE
12	STUFFING BOX	1	DUCTILE IRON
13	GLAND BOLT	1S	STEEL
14	GLAND NUT	1S	STEEL
15	GLAND PACKING	1S	GRAPHITE
16	GLAND	1	DUCTILE IRON
17	HANDLE WHEEL	1	CAST IRON
18	WASHER	1	STEEL
19	WHEEL BOLT	1	STEEL
20	INDICATOR	1	ZINC ALLOY
21	PLATE	1	ALUMINUM
22	SCREW	1	STEEL

⚠

- DO NOT USE FOR STEAM
- DO NO USE UNDER FREEZE
- DO NOT USE FOR FLAMMABLE
- DO NOT USE FOR POISIONOUS GAS APPLICATION
- WARRANTY ONLY APPLIES IN ASEAN

SIZE	DIMENSIONS(mm)								
DN	L	D1	C	D	t	f	n-øh	D0	H
50	150	165	125	99	16	2	4-19	160	296
65	170	185	145	118	16	2	4-19	160	334
80	180	200	160	132	17	2	8-19	160	378
100	190	220	180	156	17	2	8-19	200	444
125	200	250	210	184	18	3	8-19	200	527
150	210	285	240	211	20	3	8-23	250	603
200	230	340	295	266	21	3	12-23	250	758
250	250	405	355	319	23	3	12-28	320	909
300	270	460	410	370	24	4	12-28	320	1048

* All or part of the information listed on this sheet may be changed or removed without prior notice.

PN16 Ductile Iron Non Rising Stem Soft Seated Gate Valve

Fig: FG16FNS

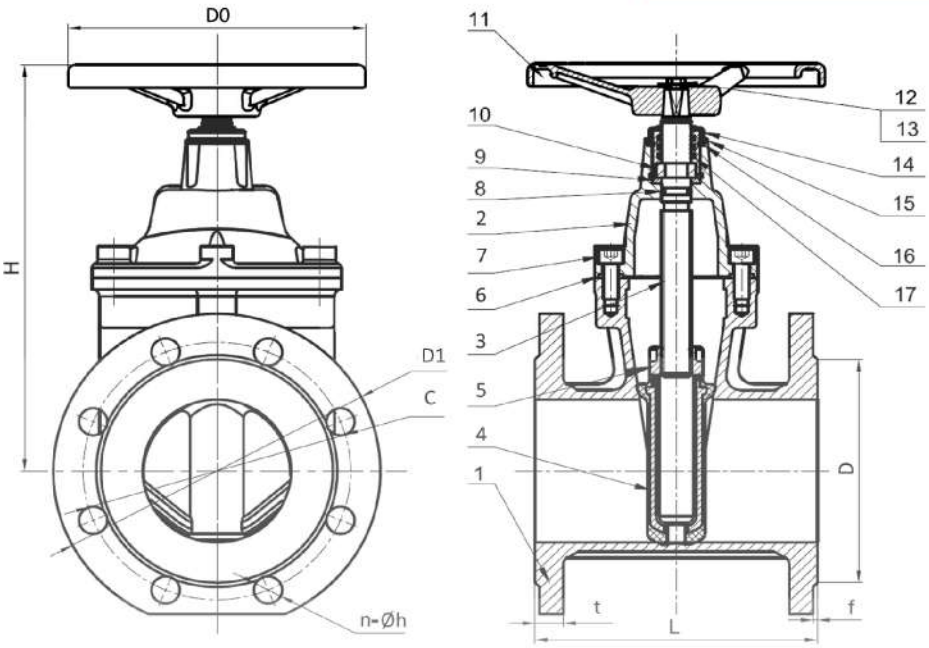

SPECIFICATION

- Ductile Iron Body
- Design According to EN1171
- Face to Face Dimension Conforms to Series 14 of EN 558
- Flange Conforms to EN1092-2
- Nominal Pressure: 1.6MPa
- Working Temperature: 0~100°C
- Suitable Medium: Water

MATERIALS

NO	NAME OF PARTS	QTY	MATERIALS
1	BODY	1	DUCTILE IRON
2	BONNET	1	DUCTILE IRON
3	STEM	1	STAINLESS STEEL
4	DISC	1	DUCTILE IRON+EPDM
5	STEM NUT	1	ALUMINUM BRONZE
6	GASKET	1	EPDM
7	BONNET BOLT	1 S	CARBON STEEL+ZINC
8	O RING	1	EPDM
9	BONNET BUSH	1	NYLON
10	SPLIT COLLAR	1	COPPER ALLOY
11	HANDLE WHEEL	1	DUCTILE IRON
12	WHEEL BOLT	1	STAINLESS STEEL
13	WHEEL WASHER	1	STAINLESS STEEL
14	O RING	1	EPDM
15	SLEEVE NUT	1	BRASS
16	O RING	1	EPDM
17	O RING	1	EPDM

⚠

- DO NOT USE FOR STEAM
- DO NO USE UNDER FREEZE
- DO NOT USE FOR FLAMMABLE
- DO NOT USE FOR POISIONOUS GAS APPLICATION
- WARRANTY ONLY APPLIES IN ASEAN

SIZE	DIMENSIONS(mm)								
DN	L	D1	C	D	t	f	n-øh	D0	H
50	150	165	125	99	19	3	4-19	140	200
65	170	185	145	118	19	3	4-19	140	226
80	180	200	160	132	19	3	8-19	160	255
100	190	220	180	156	19	3	8-19	180	282
125	200	250	210	184	19	3	8-19	200	345
150	210	285	240	211	19	3	8-23	200	388
200	230	340	295	266	20	3	12-23	200	486
250	250	405	355	319	22	3	12-28	250	585
300	270	460	410	370	24.5	4	12-28	250	654
350	290	520	470	429	26.5	4	16-28	500	778
400	310	580	525	480	28	4	16-31	500	848

* All or part of the information listed on this sheet may be changed or removed without prior notice.

PN16 Brass Globe Valve

Fig: CL16B (BSPT)
CL16N (NPT)

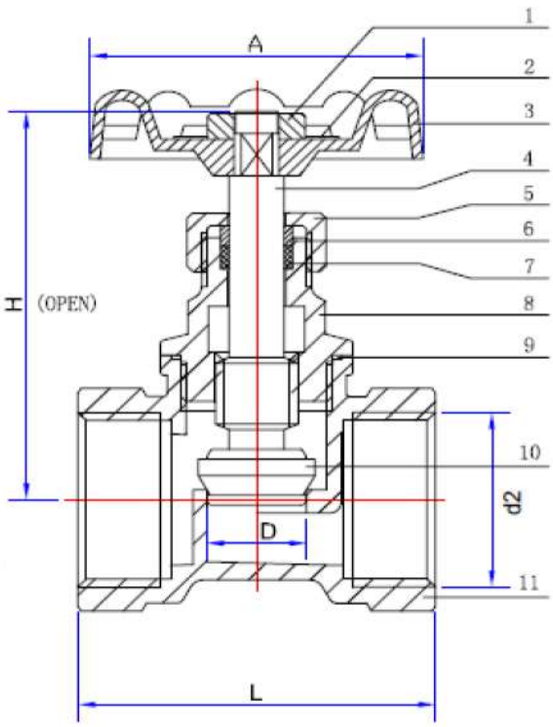

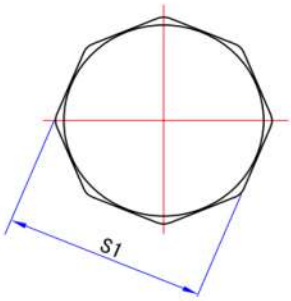

SPECIFICATION

- Brass Body
- BSPT or NPT Threaded End
- Nominal Pressure : 1.6MPa
- Working Temperature : -5~120°C
- Suitable Medium: Water and Oil

MATERIALS

NO	NAME OF PARTS	QTY	MATERIALS
1	WHEEL NUT	1	STAINLESS STEEL
2	NAME PLATE	1	ALUMINUM
3	HAND WHEEL	1	ADC
4	STEM	1	BRASS
5	PACKING NUT	1	BRASS
6	GLAND	1	BRASS
7	GLAND PACKING	1	PTFE
8	BONNET	1	BRASS
9	GASKET	1	PTFE
10	DISC	1	BRASS
11	BODY	1	BRASS

⚠

- DO NOT USE FOR STEAM
- DO NO USE UNDER FREEZE
- DO NO USE FOR UNDERGROUND APPLICATION
- DO NOT USE FOR FLAMMABLE
- DO NOT USE FOR POISIONOUS GAS APPLICATION
- WARRANTY ONLY APPLIES IN ASEAN

SIZE	d2	DIMENSIONS (mm)				
DN	BSPT or NPT	D	H	A	L	S1
15	1/2	11.5	71	63	48	25.5
20	3/4	14.5	77	63	52	32
25	1	19	88	63	64	38.5
32	1.1/4	25	102	70	74	47.5
40	1.1/2	31	110	80	80	54
50	2	38	130	90	100	66

* All or part of the information listed on this sheet may be changed or removed without prior notice.

PN16 Cast Iron Globe Valve

Fig: FL16F

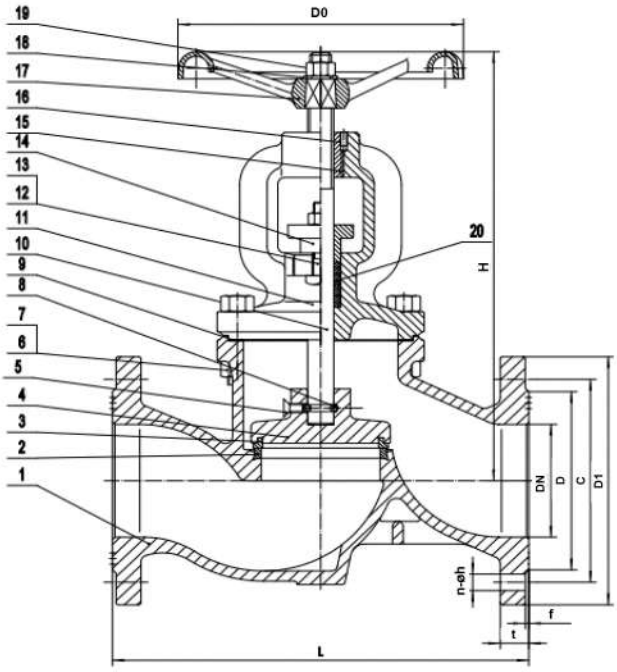

SPECIFICATION

- Cast Iron Body
- Design According to DIN EN13789
- Face to Face Dimension Conforms to Series 1 of BS EN558-1
- Flange Conforms to BS EN1092
- Nominal Pressure: 1.6MPa
- Working Temperature: -10~120°C
- Suitable Medium: Water and Oil

MATERIALS

NO	NAME OF PARTS	QTY	MATERIALS
1	BODY	1	CAST IRON
2	BODY SEAT RING	1	CAST BRONZE
3	DISC SEAT RING	1	CAST BRONZE
4	DISC	1	CAST IRON
5	SCREW	1	STEEL
6	NUT	1S	STEEL
7	BOLT	1S	STEEL
8	STEEL BALL	1S	STEEL
9	GASKET	1	GRAPHITE
10	STEM	1	STAINLESS STEEL
11	BONNET	1	CAST IRON
12	BONNET BOLT	1S	STEEL
13	BONNET NUT	1S	STEEL
14	GLAND	1	DUCTILE IRON
15	STEM NUT	1	CAST BRASS
16	SCREW	1	STEEL
17	HANDLE WHEEL	1	CAST IRON
18	WASHER	1	STEEL
19	WHEEL NUT	1	STEEL
20	GLAND PACKING	1S	GRAPHITE

⚠

- DO NOT USE FOR STEAM
- DO NO USE UNDER FREEZE
- DO NOT USE FOR FLAMMABLE
- DO NOT USE FOR POISIONOUS GAS APPLICATION
- WARRANTY ONLY APPLIES IN ASEAN

SIZE	DIMENSIONS(mm)									
DN	L	D1	C	D	t	f	n-øh	D0	H(S)	H(O)
50	230	165	125	99	20	3	4-19	140	262	296
65	290	185	145	118	20	3	4-19	200	293	337
80	310	200	160	132	22	3	8-19	200	341	379
100	350	220	180	156	24	3	8-19	240	381	425
125	400	250	210	184	26	3	8-19	280	419	477
150	480	285	240	211	26	3	8-23	315	485	551
200	600	340	295	266	30	3	12-23	360	569	656
250	730	405	355	319	32	3	12-28	400	634	752
300	850	460	410	370	32	4	12-28	400	801	981

PN16 Brass Swing Check Valve

Fig: CC16B (BSPT)
CC16N (NPT)

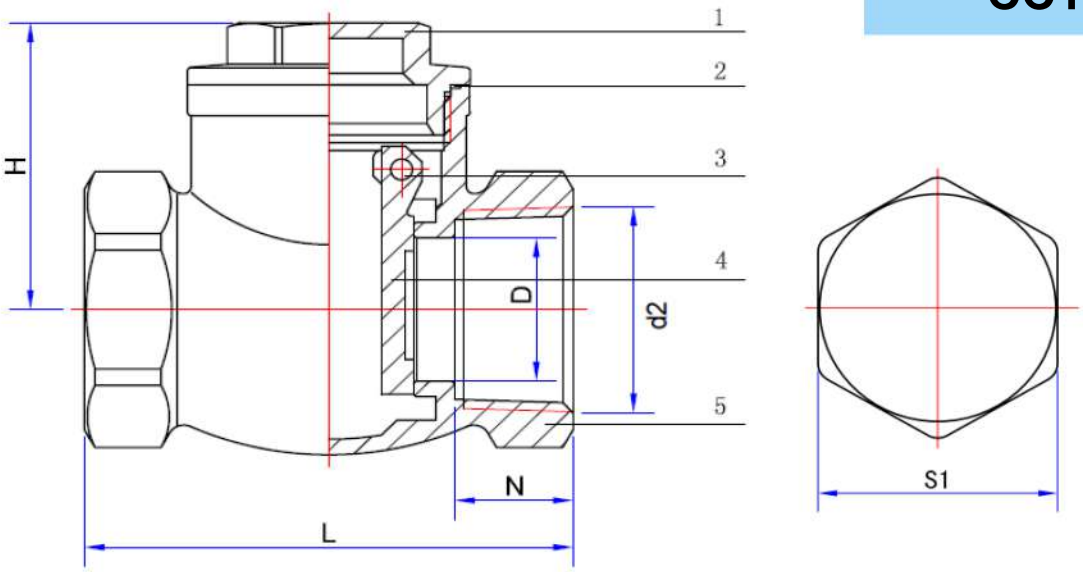

SPECIFICATION

- Brass Body
- BSPT or NPT Threaded End
- Nominal Pressure : 1.6MPa
- Working Temperature : -5~120°C
- Suitable Medium: Water and Oil

MATERIALS

NO	NAME OF PARTS	QTY	MATERIALS
1	CAP	1	BRASS
2	GASKET	1	PTFE
3	HINGE PIN	1	STAINLESS STEEL
4	DISC	1	NBR
5	BODY	1	BRASS

⚠

- DO NOT USE FOR STEAM
- DO NO USE UNDER FREEZE
- DO NO USE FOR UNDERGROUND APPLICATION
- DO NOT USE FOR FLAMMABLE
- DO NOT USE FOR POISIONOUS GAS APPLICATION
- WARRANTY ONLY APPLIES IN ASEAN

SIZE	d2	DIMENSIONS (mm)			
DN	BSPT or NPT	H	L	D	S1
15	1/2	34	52.5	13	26
20	3/4	37	60.5	18.5	31.5
25	1	42	72	23.5	38.5
32	1.1/4	50	82	30.5	49
40	1.1/2	58	95	36	54
50	2	68	107	45	66.5

* All or part of the information listed on this sheet may be changed or removed without prior notice.

KITAZAWA

PN16 Cast Iron Swing Check Valve

Fig: FC16F

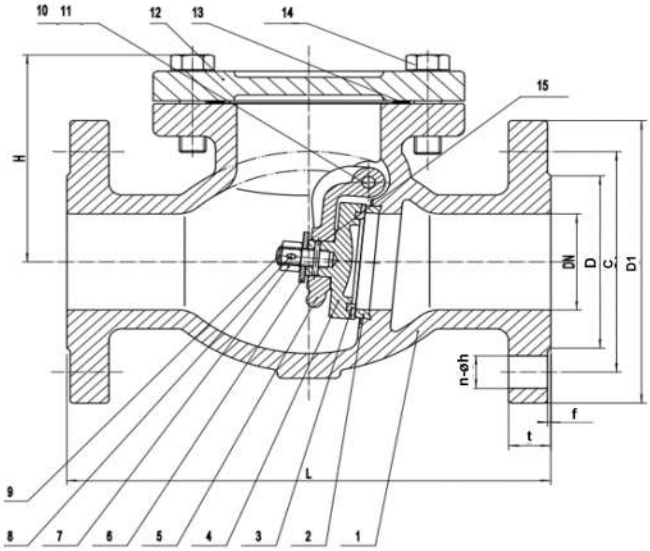

SPECIFICATION

- Cast Iron Body
- Design According to DIN EN12334
- Face to Face Dimension Conforms to Series 48 of BS 558-1
- Flange Conforms to BS EN1092
- Nominal Pressure: 1.6MPa
- Working Temperature: -10~120°C
- Suitable Medium: Water and Oil

MATERIALS

NO	NAME OF PARTS	QTY	MATERIALS
1	BODY	1	CAST IRON
2	BODY SEAT RING	1	CAST BRONZE
3	DISC SEAT RING	1	CAST BRONZE
4	DISC	1	CAST IRON
5	ARM	1	DUCTILE IRON
6	WASHER	1	STEEL
7	DISC NUT	1	STEEL
8	SPLIT PIN	1	STAINLESS STEEL
9	DISK BOLT	1	STEEL
10	PLUG	1	BRASS
11	HINGE PIN	1	STAINLESS STEEL
12	COVER	1	CAST IRON
13	GASKET	1	GRAPHITE
14	COVER BOLT	1S	STEEL
15	SPRING PIN	1	STAINLESS STEEL

⚠

- DO NOT USE FOR STEAM
- DO NO USE UNDER FREEZE
- DO NOT USE FOR FLAMMABLE
- DO NOT USE FOR POISIONOUS GAS APPLICATION
- WARRANTY ONLY APPLIES IN ASEAN

SIZE	DIMENSIONS(mm)							
DN	L	D1	C	D	t	f	n-øh	H
50	200	165	125	99	20	3	4-19	112
65	240	185	145	118	20	3	4-19	132
80	260	200	160	132	22	3	8-19	141
100	300	220	180	156	24	3	8-19	162
125	350	250	210	184	26	3	8-19	192
150	400	285	240	211	26	3	8-23	211
200	500	340	295	266	30	3	12-23	270
250	600	405	355	319	32	3	12-28	316
300	700	460	410	370	32	4	12-28	357

* All or part of the information listed on this sheet may be changed or removed without prior notice.

KITAZAWA

PN16 Cast / Ductile Iron Dual Plate Wafer Check Valve

Fig: FD16WU

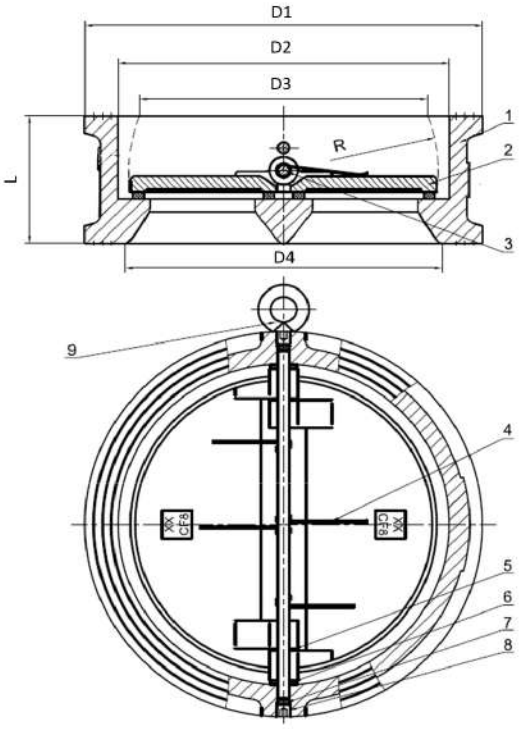

SIZE 2"-20"

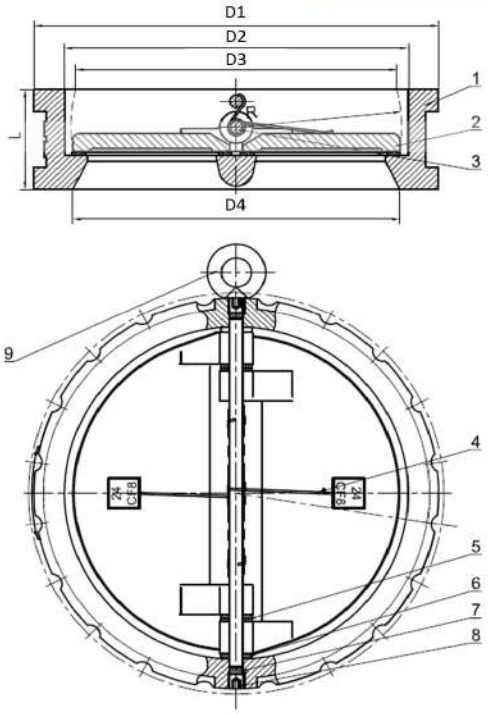

SIZE 24" ONLY

SPECIFICATION

- Cast Iron Body (2"-20")
  Ductile Iron Body (24" Only)
- Design According to EN12334
- Face to Face Dimension Conforms to 16 Series of EN 558
- Flange Conforms to EN1092-2 PN10/16
- Nominal Pressure: 1.6MPa
- Working Temperature: -10~100°C
- Suitable Medium: Water

MATERIALS

NO	NAME OF PARTS	QTY	MATERIALS
1	BODY	1	CAST IRON (2"-20")
			DUCTILE IRON (24" ONLY)
2	DISC	2	STAINLESS STEEL
3	STEM	1	STAINLESS STEEL
4	SPRING	1S	STAINLESS STEEL
5	PLATE WASHER	1	PTFE
6	BODY WASHER	1	PTFE
7	SEAL RING	1	EPDM
8	PLUG	1	STAINLESS STEEL
9	EYE BOLT	1	CARBON STEEL

SIZE	DIMENSIONS(mm)					
DN	L	D1	D2	D3	D4	R
50	43	107	66	41.1	58	28.8
65	46	126	80.7	64.6	74	36.1
80	64	141	95	62.6	84	43.4
100	64	161	117.8	84.2	109	52.8
125	70	191	145.6	119.8	139	65.7
150	76	217	170.5	141	162	78.6
200	89	272	224.8	201.5	211	104.4
250	114	327	266	229	255	127
300	114	377	310.8	279	296	148.3
350	127	437	360	333	350	172.5
400	140	487	410	383	400	198.5
450	152	537	450	420.6	440	218
500	152	592	505	475.5	480	245
600	178	700	624	589	600	303

⚠

- DO NOT USE FOR STEAM
- DO NO USE UNDER FREEZE
- DO NOT USE FOR FLAMMABLE
- DO NOT USE FOR POISIONOUS GAS APPLICATION
- WARRANTY ONLY APPLIES IN ASEAN

* All or part of the information listed on this sheet may be changed or removed without prior notice.

PN16 Ductile Iron Wafer Type Butterfly Valve

Fig: FF16WU-L

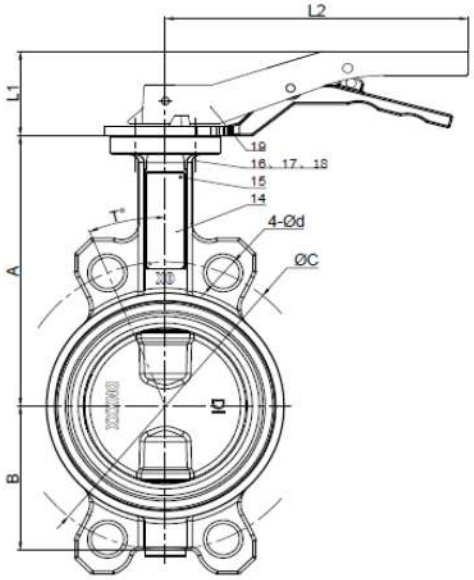

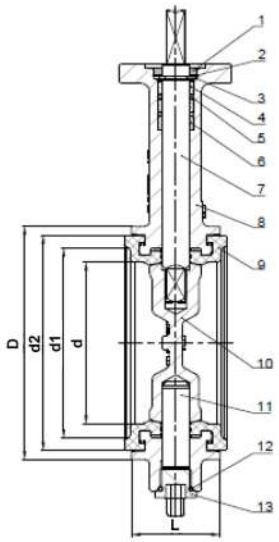

SPECIFICATION

- Ductile Iron Body
- Design According to BS EN 593
- Face to Face Dimension Conforms to BS EN 558 20 series
- Flange Conforms to BS EN 1092-2 PN16
- Top flange: ISO 5211
- Nominal Pressure: 1.6 MPa
- Working Temperature: -10~100°C
- Suitable Medium: Water

MATERIALS

NO	NAME OF PARTS	QTY	MATERIALS
1	DUST SEAL	1	NBR
2	SNAP RING	1	65Mn
3	U-RING	1S	STAINLESS STEEL
4	BEARING	1	COOPER ALLOY
5	O-RING	2	NBR
6	BEARING	1	GLASS FIBER+F4
7	STEM	1	STAINLESS STEEL
8	BODY	1	DUCTILE IRON
9	SEAT RUBBER	1	EPDM
10	DISC	1	DUCTILE IRON
11	BOTTOM STEM	1	STAINLESS STEEL
12	O-RING	1	NBR
13	PLUG	1	CARBON STEEL+Cr PLATING
14	NAMEPLATE	1	ALUMINUM
15	RIVET	2	ALUMINUM
16	SET BOLT	1S	STAINLESS STEEL
17	NUT	1S	STAINLESS STEEL
18	WASHER	1	STAINLESS STEEL
19	HANDLE	1	ALUMINUM

⚠

- DO NOT USE FOR STEAM
- DO NO USE UNDER FREEZE
- DO NOT USE FOR FLAMMABLE
- DO NOT USE FOR POISIONOUS GAS APPLICATION
- WARRANTY ONLY APPLIES IN ASEAN

SIZE	DIMENSIONS(mm)										
DN	d	d1	d2	A	B	L1	L	C	4-ød	D	L2
40	40	53	67	135	52	53	33	110	19	75	180
50	50	62	76	140	60	53	43	125	19	89	180
65	67	82	96	150	70	53	46	145	19	107	180
80	80	101	115	156	86	53	46	160	19	123	180
100	98	116	130	169	90	53	52	180	19	141	180
125	125	145	159	190	105	53	56	210	19	170	220
150	148	170	185	200	120	53	56	240	23	196	220

KITAZAWA

PN16 Ductile Iron Butterfly Valve

Fig: FF16WU-G

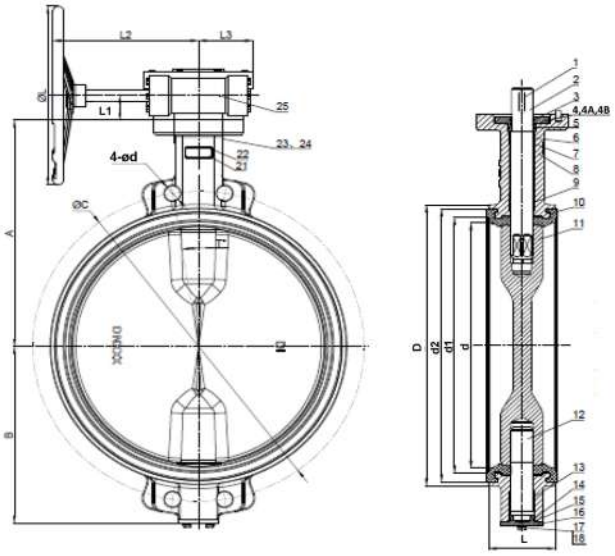

SPECIFICATION

- Ductile Iron Body
- Design According to BS EN 593
- Face to Face Dimension
  Conforms to BS EN 558 20 series
- Flange Conforms to
  BS EN 1092-2 PN16
- Top flange: ISO 5211
- Nominal Pressure: 1.6 MPa
- Working Temperature:
- -10~100°C
  Suitable Medium: Water

MATERIALS

NO	NAME OF PARTS	QTY	MATERIALS
2	STEM	1	STAINLESS STEEL
3	O-RING	1	NBR
4	GLAND	1	DUCTILE IRON (DN350~600)
4A	SNAP RING	1	65Mn (DN40~300)
4B	U-RING	1S	STAINLESS STEEL (DN40~300)
5	O-RING	1	NBR
6	O-RING	1	NBR
7	BEARING	1	COOPER ALLOY (DN350~600) GLASS FIBER+F4 (DN40~300)
8	BODY	1	DUCTILE IRON
9	BEARING	1	COOPER ALLOY
10	SEAT RUBBER	1	EPDM
11	DISC	1	DUCTILE IRON
12	BOTTOM STEM	1	STAINLESS STEEL
13	BEARING	1	COOPER ALLOY
14	O-RING	1	NBR
15	O-RING	1	NBR
16	PLUG	1	DUCTILE IRON (DN350~600) CARBON STEEL+Ni (DN250~300) CARBON STEEL+Cr (DN40~200)
17	BOLT	1S	STAINLESS STEEL
18	WASHER	1S	STAINLESS STEEL
21	NAMEPLATE	1	ALUMINUM
22	RIVET	2	ALUMINUM
23	SET BOLT	1S	STAINLESS STEEL
24	WASHER	1S	STAINLESS STEEL
25	GEAR UNIT	1	CAST IRON

⚠

- DO NOT USE FOR STEAM
- DO NO USE UNDER FREEZE
- DO NOT USE FOR FLAMMABLE
- DO NOT USE FOR POISIONOUS GAS APPLICATION
- WARRANTY ONLY APPLIES IN ASEAN

SIZE	DIMENSIONS(mm)												
DN	d	d1	d2	A	B	L1	L	C	4-ød	D	øL	L2	L3
40	40	53	67	135	52	37	33	110	19	75	120	150	54
50	50	62	76	140	60	37	43	125	19	89	120	150	54
65	67	82	96	150	70	37	46	145	19	107	120	150	54
80	80	101	115	156	86	37	46	160	19	123	120	150	54
100	98	116	130	169	90	37	52	180	19	141	120	150	54
125	125	145	159	190	105	37	56	210	19	170	120	150	54
150	148	170	185	200	120	37	56	240	23	196	120	150	54
200	198	222	241	224	158	37	60	295	23	251	200	216	63
250	249	277	297	265	197	37	68	355	28	308	200	216	63
300	300	328	348	303	230	37	78	410	28	358	200	216	63
350	335	362	398	364	276	42	78	470	28	412	295	260	75
400	390	434	454	413	312	63	102	525	31	470	385	290	128
450	443	470	493	422	336	62	114	585	31	520	450	343	128
500	495	520	548	480	366	62	127	650	34	565	450	343	128
600	598	637	665	562	440	62	154	770	37	685	450	343	128

* All or part of the information listed on this sheet may be changed or removed without prior notice.

KITAZAWA

ANSI150 Ductile Iron Lug Type Butterfly Valve

Fig: FF150LU-L

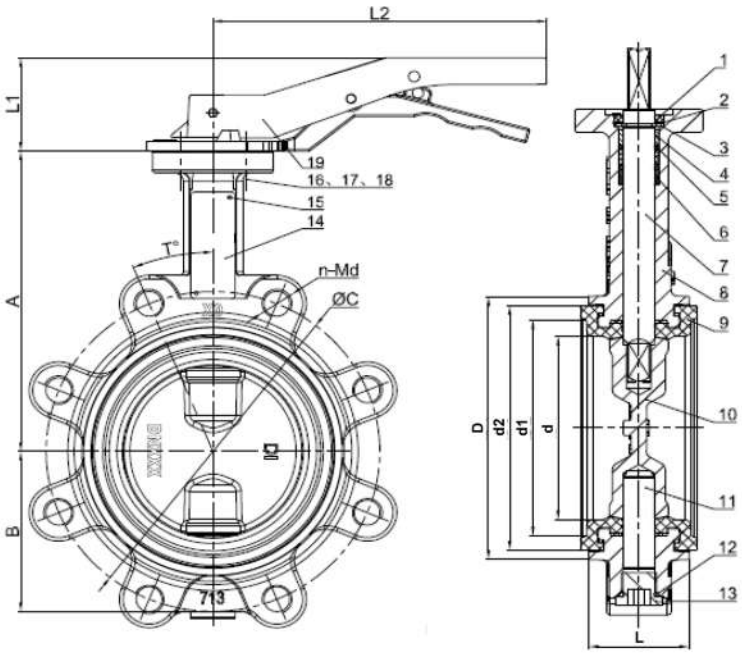

SPECIFICATION

- Ductile Iron Body
- Design According to BS EN 593
- Face to Face Dimension Conforms to BS EN 558 20 series
- Flange Conforms to ASME B16.5 CLASS 150
- Top flange: ISO 5211
- Nominal Pressure: 1.72MPa
- Working Temperature: -10~100°C
- Suitable Medium: Water

MATERIALS

NO	NAME OF PARTS	QTY	MATERIALS
1	DUST SEAL	1	NBR
2	SNAP RING	1	65Mn
3	U-RING	1	STAINLESS STEEL
4	BEARING	1	COOPER
5	O-RING	2	NBR
6	BEARING	1	GLASS FIBER+F4
7	STEM	1	STAINLESS STEEL
8	BODY	1	DUCTILE IRON
9	SEAT RUBBER	1	EPDM
10	DISC	1	DUCTILE IRON
11	BOTTOM STEM	1	STAINLESS STEEL
12	O-RING	1	NBR
13	PLUG	1	CARBON STEEL+Cr PLATING
14	NAMEPLATE	1	ALUMINUM
15	RIVET	2	ALUMINUM
16	SET BOLT	1S	STAINLESS STEEL
17	NUT	1S	STAINLESS STEEL
18	WASHER	1S	STAINLESS STEEL
19	HANDLE	1	ALUMINUM

⚠

- DO NOT USE FOR STEAM
- DO NO USE UNDER FREEZE
- DO NOT USE FOR FLAMMABLE
- DO NOT USE FOR POISIONOUS GAS APPLICATION
- WARRANTY ONLY APPLIES IN ASEAN

SIZE	DIMENSIONS(mm)										
DN	d	d1	d2	A	B	L1	L	C	n-M	D	L2
40	40	53	67	135	52	53	33	98.4	4-(1/2-13UNC)	75	180
50	50	62	76	140	60	53	43	120.7	4-(5/8-11UNC)	89	180
65	67	82	96	150	70	53	46	139.7	4-(5/8-11UNC)	107	180
80	80	101	115	156	86	53	46	152.4	4-(5/8-11UNC)	123	180
100	98	116	130	169	90	53	52	190.5	8-(5/8-11UNC)	141	180
125	125	145	159	190	105	53	56	215.9	8-(3/4-10UNC)	170	220
150	148	170	185	200	120	53	56	241.3	8-(3/4-10UNC)	196	220

* All or part of the information listed on this sheet may be changed or removed without prior notice.

ANSI150 Ductile Iron Lug Type Butterfly Valve

Fig: FF150LU-G

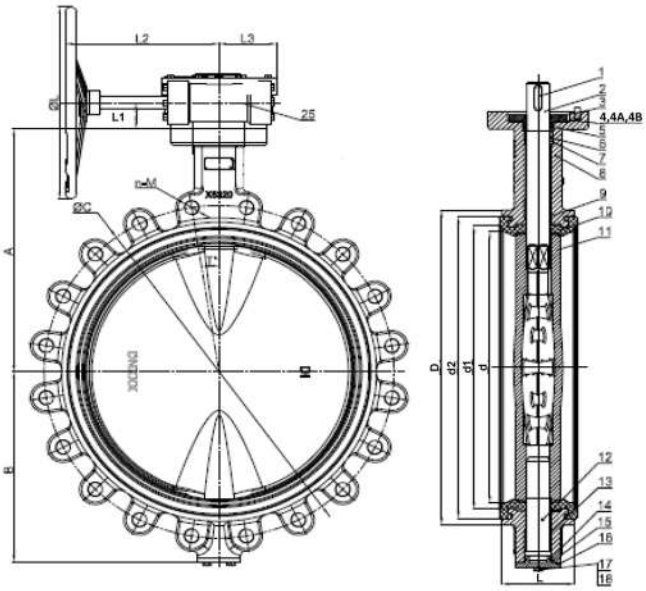

SPECIFICATION

- Ductile Iron Body
- Design According to BS EN 593
- Face to Face Dimension Conforms to BS EN 558 20 series
- Flange Conforms to ASME B16.5 CLASS 150
- Top flange: ISO 5211
- Nominal Pressure: 1.72MPa
- Working Temperature: -10~100°C
- Suitable Medium: Water

MATERIALS

NO	NAME OF PARTS	QTY	MATERIALS
2	STEM	1	STAINLESS STEEL
3	O-RING	1	NBR
4	GLAND	1	DUCTILE IRON (DN350~600)
4A	SNAP RING	1	65Mn (DN40~300)
4B	U-RING	1S	STAINLESS STEEL (DN40~300)
5	O-RING	1	NBR
6	O-RING	1	NBR
7	BEARING	1	COOPER ALLOY (DN350~600) GLASS FIBER+F4 (DN40~300)
8	BODY	1	DUCTILE IRON
9	BEARING	1	COOPER ALLOY
10	SEAT RUBBER	1	EPDM
11	DISC	1	DUCTILE IRON
12	BOTTOM STEM	1	STAINLESS STEEL
13	BEARING	1	COOPER ALLOY
14	O-RING	1	NBR
15	O-RING	1	NBR
16	PLUG	1	DUCTILE IRON (DN350~600) CARBON STEEL+Ni (DN250~300) CARBON STEEL+Cr (DN40~200)
17	BOLT	1S	STAINLESS STEEL
18	WASHER	1S	STAINLESS STEEL
21	NAMEPLATE	1	ALUMINUM
22	RIVET	2	ALUMINUM
23	SET BOLT	1S	STAINLESS STEEL
24	WASHER	1S	STAINLESS STEEL
25	GEAR UNIT	1	CAST IRON

⚠

- DO NOT USE FOR STEAM
- DO NO USE UNDER FREEZE
- DO NOT USE FOR FLAMMABLE
- DO NOT USE FOR POISIONOUS GAS APPLICATION
- WARRANTY ONLY APPLIES IN ASEAN

SIZE	DIMENSIONS(mm)												
DN	d	d1	d2	A	B	L1	L	C	n-M	D	øL	L2	L3
40	40	53	67	135	52	37	33	98.4	4-(1/2-13UNC)	75	120	150	54
50	50	62	76	140	60	37	43	120.7	4-(5/8-11UNC)	89	120	150	54
65	67	82	96	150	70	37	46	139.7	4-(5/8-11UNC)	107	120	150	54
80	80	101	115	156	86	37	46	152.4	4-(5/8-11UNC)	123	120	150	54
100	98	116	130	169	90	37	52	190.5	8-(5/8-11UNC)	141	120	150	54
125	125	145	159	190	105	37	56	215.9	8-(3/4-10UNC)	170	120	150	54
150	148	170	185	200	120	37	56	241.3	8-(3/4-10UNC)	196	120	150	54
200	198	222	241	224	158	37	60	298.5	8-(3/4-10UNC)	251	200	216	63
250	249	277	297	265	197	37	68	362.0	12-(7/8-9UNC)	308	200	216	63
300	300	328	348	303	230	37	78	431.8	12-(7/8-9UNC)	358	200	216	63
350	335	362	398	364	276	42	78	476.3	12-(1-8UNC)	412	295	260	75
400	390	434	454	413	312	63	102	539.8	16-(1-8UNC)	470	385	290	128
450	443	470	493	422	336	62	114	577.9	16-(1.1/8-8UN)	520	450	343	128
500	495	520	548	480	366	62	127	635.0	20-(1.1/8-8UN)	565	450	343	128
600	598	637	665	562	440	62	154	749.3	20-(1.1/4-8UN)	685	450	343	128

* All or part of the information listed on this sheet may be changed or removed without prior notice.

PN16 Brass Y-Type Strainer

Fig: CY16B (BSPT)
CY16N (NPT)

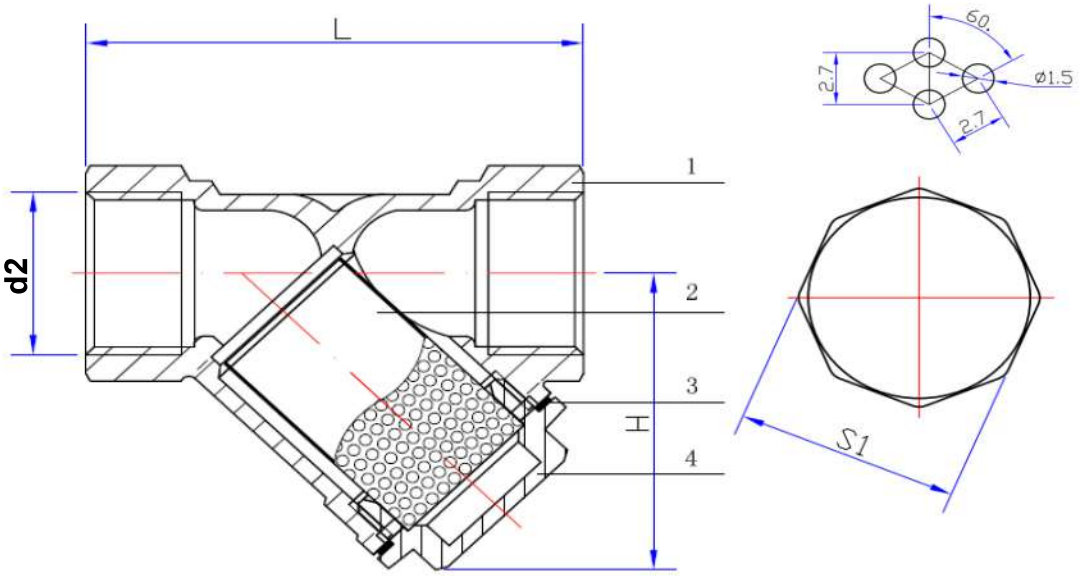

SPECIFICATION

- Brass Body
- BSPT or NPT Threaded End
- Nominal Pressure : 1.6MPa
- Working Temperature : -5~120°C
- Suitable Medium: Water and Oil

MATERIALS

NO	NAME OF PARTS	QTY	MATERIALS
1	BODY	1	BRASS
2	SCREEN	1	STAINLESS STEEL
3	GASKET	1	PTFE
4	CAP	1	BRASS

⚠

- DO NOT USE FOR STEAM
- DO NO USE UNDER FREEZE
- DO NO USE FOR UNDERGROUND APPLICATION
- DO NOT USE FOR FLAMMABLE
- DO NOT USE FOR POISIONOUS GAS APPLICATION
- WARRANTY ONLY APPLIES IN ASEAN

SIZE	d2	DIMENSIONS (mm)		
DN	BSPT or NPT	H	L	S1
15	1/2	41	56	26
20	3/4	48	69	32
25	1	58	82	38.5
32	1.1/4	66	90	47.5
40	1.1/2	74	101	54
50	2	92	123	66

* All or part of the information listed on this sheet may be changed or removed without prior notice.

PN16 Ductile Iron Y-Type Strainer

Fig: FY16F

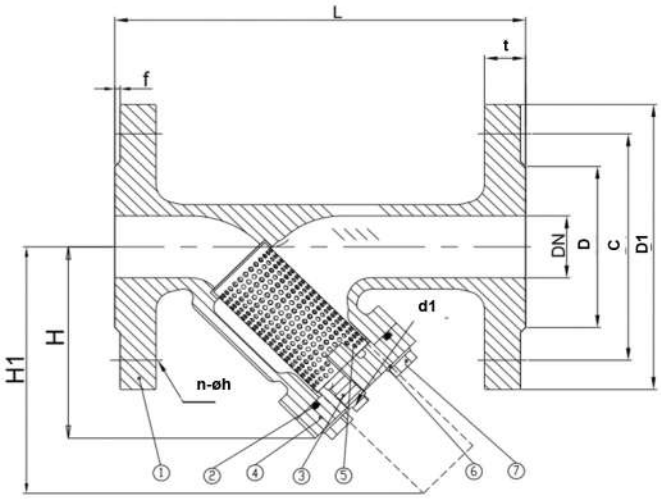

SPECIFICATION

- Ductile Iron Body
- Face to Face Dimension Conforms to DIN3202 F1
- Flange Conforms to BS EN1092-2 PN16
- Nominal Pressure: 1.6 MPa
- Working Temperature: -10~100°C
- Suitable Medium: Water

MATERIALS

NO	NAME OF PARTS	QTY	MATERIALS
1	BODY	1	DUCTILE IRON
2	GASKET	1	EPDM
3	PLUG	1	STAINLESS STEEL
4	COVER	1	DUCTILE IRON
5	SCREEN	1	STAINLESS STEEL
6	WASHER	1S	STAINLESS STEEL
7	COVER BOLT	1S	STAINLESS STEEL

SIZE	d1	Dimensions(mm)								
DN	BSPT	D1	C	D	t	f	n-øh	L	H	H1
15	-	95	65	46	14	2	4-14	130	64	86
20	-	105	75	56	16	2	4-14	150	69	95
25	-	115	86	65	16	3	4-14	160	79	110
32	-	140	100	76	18	3	4-19	180	91	128
40	-	150	110	84	18	3	4-19	200	111	155
50	Rc3/8	165	125	99	20	3	4-19	230	138	181
65	Rc1/2	185	145	118	20	3	4-19	290	165	226
80	Rc1/2	200	160	132	22	3	8-19	310	190	265
100	Rc1/2	220	180	156	24	3	8-19	350	223	295
125	Rc3/4	250	210	184	26	3	8-19	400	262	358
150	Rc3/4	285	240	211	26	3	8-23	480	307	430
200	Rc3/4	340	295	266	30	3	12-23	600	378	559
250	Rc1	405	355	319	32	3	12-28	730	439	657
300	Rc1	460	410	370	32	4	12-28	850	511	768
350	Rc2	520	470	429	26.5	4	16-28	980	606	891
400	Rc2	580	525	480	28	4	16-31	1100	693	1010
450	Rc2	640	585	548	30	4	20-31	1200	757	1114
500	Rc2	715	650	609	32	4	20-34	1250	874	1296
600	Rc2	840	770	720	36	5	20-37	1450	1028	1531

⚠

- DO NOT USE FOR STEAM
- DO NO USE UNDER FREEZE
- DO NOT USE FOR FLAMMABLE
- DO NOT USE FOR POISIONOUS GAS APPLICATION
- WARRANTY ONLY APPLIES IN ASEAN

* All or part of the information listed on this sheet may be changed or removed without prior notice.

KITAZAWA

PN25 Ductile Iron Y-Type Strainer

Fig: FY25F

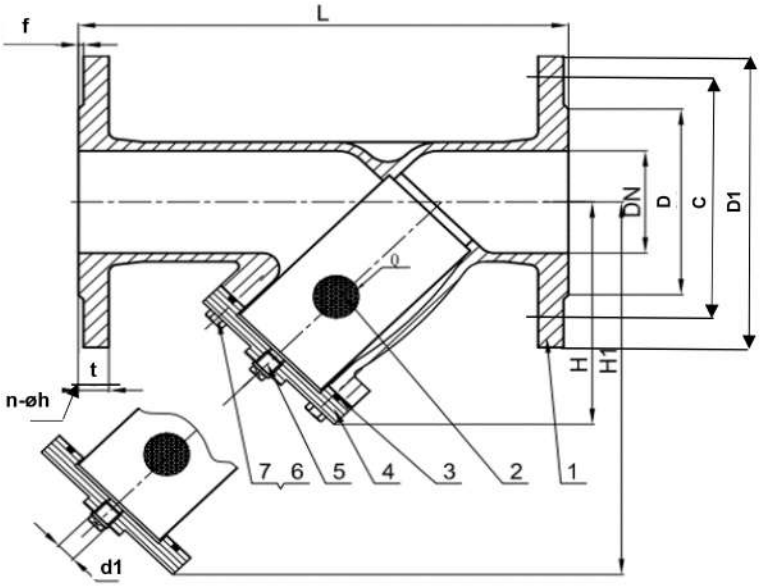

SPECIFICATIONS

- Ductile Iron Body
- Face to Face Dimension Conforms to EN 558 1 series
- Flange Conforms to BS EN1092-2 PN16
- Nominal Pressure: 2.5MPa
- Working Temperature: -10-100°C
- Suitable Medium: Water

MATERIALS

NO	NAME OF PARTS	QTY	MATERIALS
1	BODY	1	DUCTILE IRON
2	SCREEN	1	STAINLESS STEEL
3	GASKET	1	EPDM
4	COVER	1	DUCTILE IRON
5	PLUG	1	STAINLESS STEEL
6	WASHER	1S	STAINLESS STEEL
7	COVER BOLT	1S	STAINLESS STEEL

- DO NOT USE FOR STEAM
- DO NO USE UNDER FREEZE
- DO NOT USE FOR FLAMMABLE
- DO NOT USE FOR POISIONOUS GAS APPLICATION
- WARRANTY ONLY APPLIES IN ASEAN

SIZE	d1	DIMENSIONS(mm)								
DN	BSPT	D1	C	D	t	f	n-øh	L	H	H1
50	Rp1/2	165	125	99	19	3	4-19	230	117	192
65	Rp1/2	185	145	118	19	3	8-19	290	142	232
80	Rp1/2	200	160	132	19	3	8-19	310	163	265
100	Rp1/2	235	190	156	19	3	8-23	350	194	323
125	Rp1/2	270	220	184	19	3	8-28	400	248	402
150	Rp3/4	300	250	211	20	3	8-28	480	280	446
200	Rp3/4	360	310	274	22	3	12-28	600	352	560
250	Rp3/4	425	370	330	24.5	3	12-31	730	443	722
300	Rp3/4	485	430	389	27.5	4	16-31	850	480	785
350	Rp3/4	555	490	448	30	4	16-34	980	688	1158
400	Rp3/4	620	550	503	32	4	16-37	1100	854	1382

* All or part of the information listed on this sheet may be changed or removed without prior notice.

Memo

KITZ VALVE & ACTUATION VIETNAM CO.,LTD.

Head office
U.1801, 18F, Park IX
No. 8 Phan Dinh Giot Str.,
Ward 2, Tan Binh District,
Ho Chi Minh City, Vietnam

Hanoi Branch
U.1201-2, 12F
Keangnam Hanoi Landmark 72,
E6. Me Tri W., Nam Tu Liem D.,
Hanoi, Vietnam
Tel: +84-28-7306-8306
Email: kvv-sales@kitz-kvv.com

CALL CENTER
+84-28-7305-8305
Working time Monday-Friday: 8:00-17:00